Zimmer
MedizinSysteme

Instructions for Use

Cardio*Air*
CardioAir *Plus*

EN

Schematic illustrations

Front of the device, displays

Figure 1

Device view

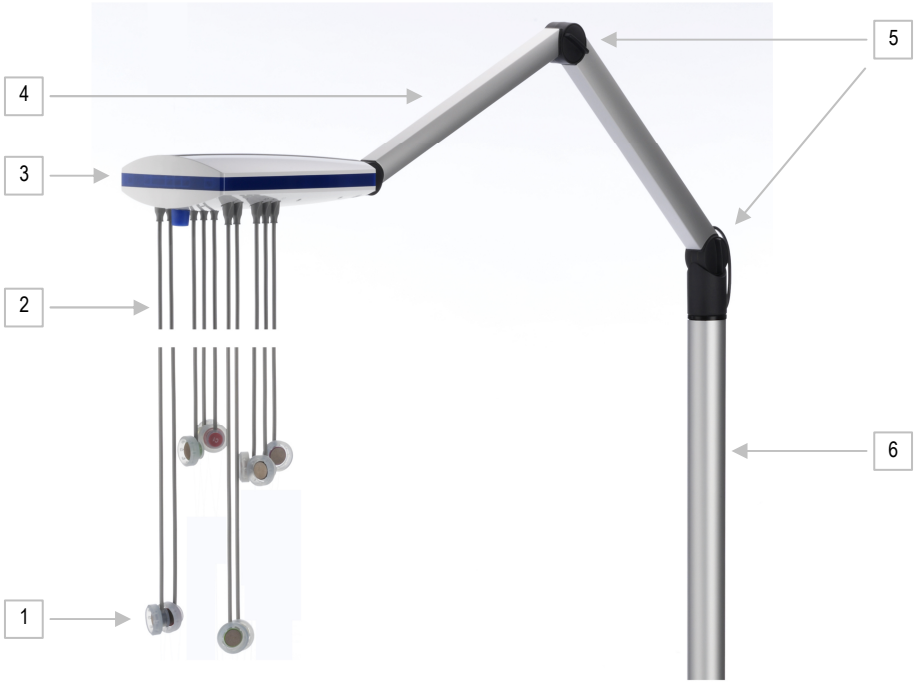

Device and operating elements

1	Suction dome	2	Electrode cables
3	Electrode distributor	4	Extension arm
5	Locking knobs	6	Stand

Figure 2

Electrode distributor

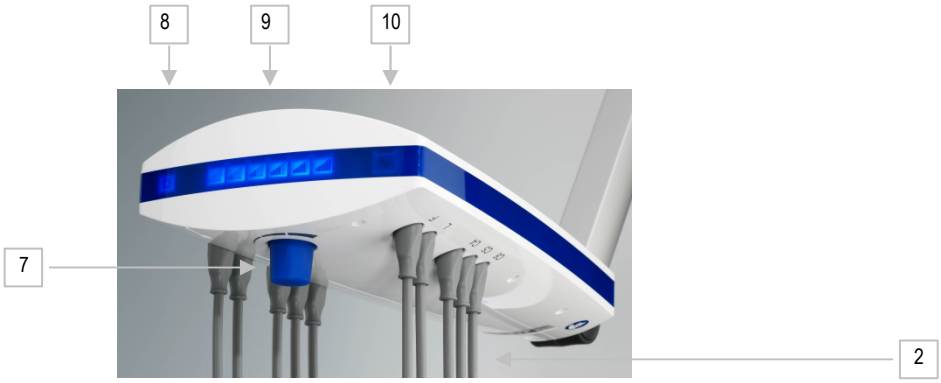

Device and operating elements

7	Vacuum dial	8	“Data transfer” LED display
9	“Vacuum” LED display	10	“Moisture” LED display

Figure 3 **Extension arm and stand**

Device and operating elements

11 Screw
12 Power cable with internal plug connection
13 Tube end

Figure 4 **Examination bed attachment**

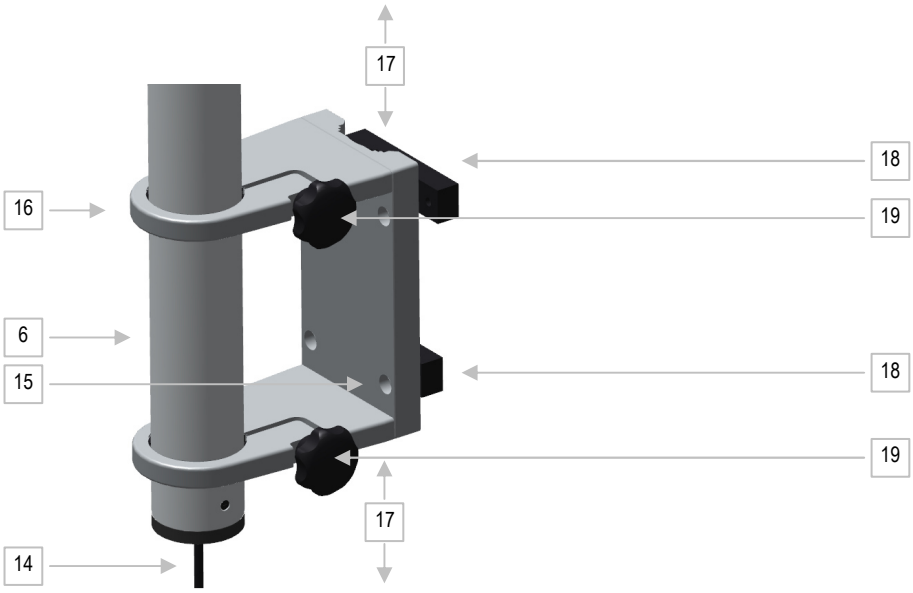

Device and operating elements

14 Power supply cable
15 Screw holes, 4 pc.
16 Examination bed attachment
17 Vertical leg of the examination bed on which the device is mounted.
18 Clamping plates
19 Knobs

Figure 5 **Table attachment**

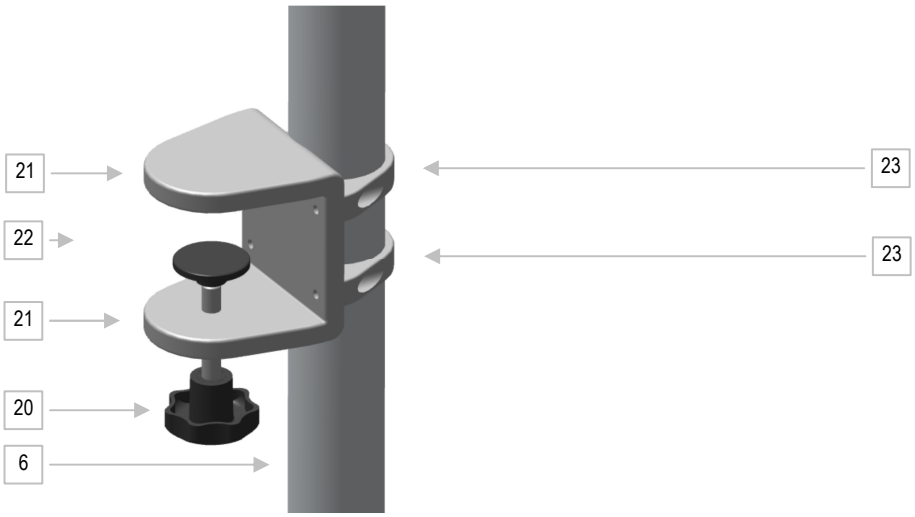

Device and operating elements

20	Knob	21	Table attachment
22	Tabletop	23	Brackets, each with two screws

Figure 6 **Wall mount**

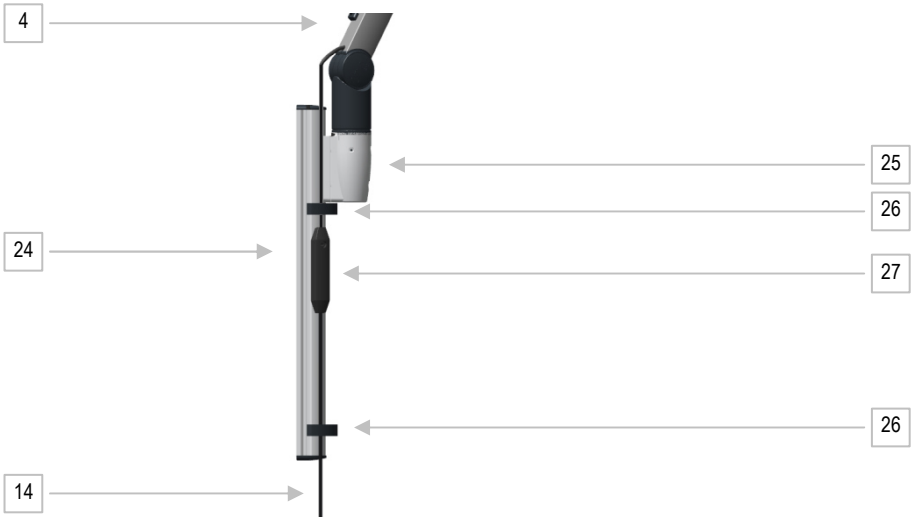

Device and operating elements

24	Wall rail	25	Adapter
26	Cable guide, 2-piece coupling	27	Coupling

Figure 7 move ***Air*** **device trolley**

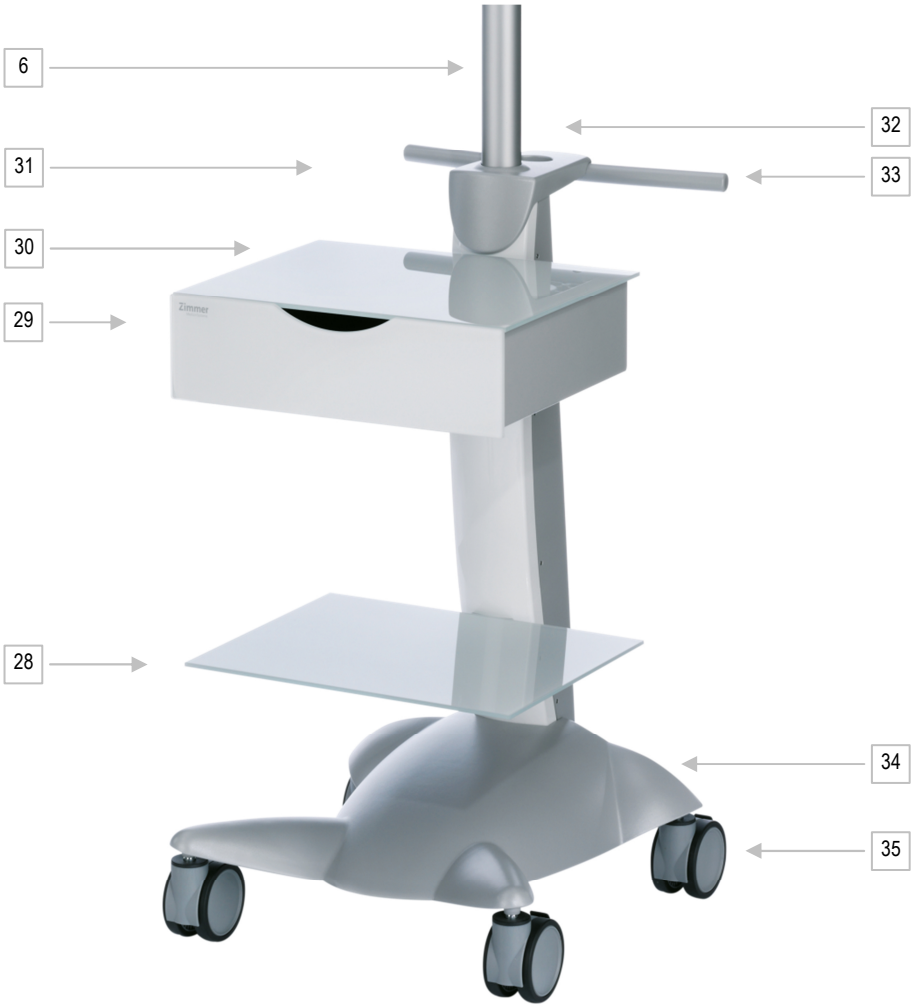

Device and operating elements

28	Lower tray	29	Tray with drawer
30	Mains connection for medical devices	31	move ***Air*** device trolley
32	Storage for electrode spray	33	Push handle
34	Mains connection, on/off switch	35	Castors with brakes

Figure 8

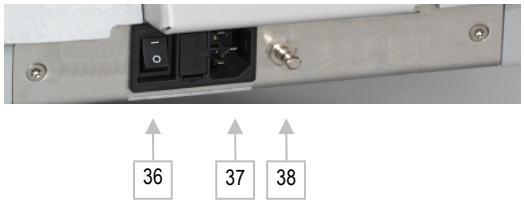

Device and operating elements

36	Mains switch	37	Mains connection with fuse
38	Equipotential bonding pin		

LED displays
ECG suction system

Operating statuses		"Vacuum" LEDs
No vacuum is set, device is off		Off
Self-test when device is switched on		Steady blue light for approx. 1 sec.
Vacuum is set		Steady blue light; the higher the vacuum setting, the brighter the LEDs are and more of the total of 6 LEDs are lit.
Automatic purging		Blue chaser light from right to left
Drying		Blue chaser light from right to left
Cleaning		Blue chaser light from right to left
Leak		Flashing blue light

Operating statuses		"Moisture" LED
No moisture found		Off
Self-test when device is switched on		Steady red light for approx. 1 sec.
Moisture in the system		Steady yellow light
Wetness in the system! No operation possible.		Flashing red light

LED displays
ECG amplifier

Operating statuses		"Data transfer" LED
No connection, device is off		Off
Self-test when device is switched on		Steady blue light for approx. 5 sec.
Wireless data connection is established with PC.		Steady blue light
Active, wireless data transmission		Flashing blue light
USB data connection is established with PC		Steady green light
Active USB data transmission		Flashing green light

Description of symbols

	In the instructions for use this symbol indicates “Danger”.		Products which are marked with the adjacent symbol may not be discarded with household waste.
Caution!	In the instructions for use this symbol indicates “Caution” with regard to possible damage of the device.	CE 0123	CE mark according to MDD (93/42/EEC)
	Applied part type CF with defibrillation protection		Connector pin according to DIN 42801 to connect an equipotential bonding conductor
max. 10Kg	Maximum permitted load on glass plate 10 kg		Data input and/or output
	USB connection to computer		Change in the suction capacity
	Connection LED		Vacuum LEDs
	Moisture LED		Follow instructions for use.
	Instructions for use	2 x T8 AL	Primary fuse 2 x T8 AL, 250 V
SN	Serial number		Manufacturer
REF	Item number		Date of manufacture

Brief start-up instructions

Mount stand

Mounting on examination bed, table or wall

- Depending on the desired attachment method, secure the corresponding mount ((16), (21), (24),) to the leg of the examination bed (17), to the tabletop (22) or to the wall.
- Use the respective screw connection to affix the stand (6) or the adapter (25) to the mount.

Mounting on move ***Air*** **device trolley**

- Assemble the device trolley (31) including the stand (6) according to the assembly instructions of the device trolley.

Mount extension arm on stand

- Connect the supply cable (12) of the extension arm (4) with the counterpart projecting from the stand (6).
- Insert the lower end of the extension arm from above (13) into the stand (6). Ensure that the supply cable (12) is not pinched.
- Fasten the lower end of the extension arm (13) to the stand (6).

Cable connection

Electrode cables, power supply, ECG cable

- Insert the electrode cables (2) into the corresponding electrode ports underneath the electrode distributor (3).
  When inserting the electrode cables into the distributor, be aware of their orientation.
- In the case of the stationary attachments (examination bed, table, wall), connect the power supply cable (14) to the power supply and the mains cable connected to this to the mains supply.
- In the case of the device trolley, connect the mains cable to the mains connection (37) and the mains supply. Switch on the power supply using the power switch (36).

Cardio***Air***

- Connect the analog ECG cable to the ECG device.

Cardio***Air Plus***

- Connect Cardio***Air Plus*** to the PC wirelessly or using the USB cable.

Electrode application

- Adjust a medium suction capacity using the dial (7). To do this, turn the dial (7) clockwise until the first three vacuum LEDs (9) are lit.
- Spray some contact spray on the ECG recording site of the patient.
- Place the electrodes on the recording site using light pressure.

Record ECG

- Start the recording of the ECG on the connected ECG device or the PC.

End ECG recording

- Switch off the suction system by turning the dial (7) counterclockwise.
- Detach the electrodes from the patient.

Contents

Contents

Valid for Cardio***Air*** and Cardio***Air Plus***.

These instructions for use are an integral part of the device. They must be stored with the device and kept accessible at all times for anyone authorised to operate this device.

Information last updated: June 2019

Indications / Contraindications / Side effects

1

Indications Resting ECG

Electrocardiography is one of the most frequently used methods to derive bioelectric signals in diagnostics. By analysing the shape, time and frequency of these signals, statements can be made about cardiac activity and pathological changes to the heart.

Indications Stress ECG

Stress tests are among the most important cardiodiagnostic procedures. This non-invasive method also enables statements on prognosis to be made. Through dynamic stress, an increase in cardiac output (stroke volume and increase in heart rate) and oxygen consumption are reached under controlled conditions which do not lead to any objective pathological findings or subjective symptoms in healthy persons. In the case of significant coronary heart disease, the blood supply to the myocardium is insufficient. The consequences of this are the occurrence of pathological ST segment changes and/or angina pectoris symptoms.

General contraindications

- Do not apply electrodes to injured skin, areas of eczema, open wounds or other skin diseases.
- During longer periods of application with a high vacuum, haematomas may develop.
- Do not apply a high vacuum in the case of patients with sensitive skin.
- In patients with a bleeding tendency of any aetiology, haematomas may also develop even with a low vacuum.
- During longer periods of application, stasis-induced skin damage may develop.
- In case of a known allergy or hypersensitivity to the materials used or to one of the ingredients, these materials or ingredients should not be used.

Contraindication - Stress examination

The device should not be used if any anomalies or malfunctions which could affect the test results are present or appear possible.

(Source: German Cardiac Society (DGK) - Cardiovascular Research)

If the presence of one of the diagnoses listed below is suspected, no stress test should be performed.

Absolute contraindications

- Acute myocardial infarct
- Unstable angina pectoris
- Cardiac arrhythmias with symptoms and/or limited haemodynamics
- Active endocarditis
- Symptomatic severe aortic stenosis
- Decompensated heart failure
- Acute pulmonary embolism, acute myocarditis, acute pericarditis, acute aortic dissection
- Physical and/or mental impairment which exclude a safe and appropriate examination.

Relative contraindications

- Left main coronary artery stenosis
- Valve disease of moderate severity
- Known electrolyte imbalances
- Arterial hypertension (BP >200 $mmHg_{syst}$ >110 $mmHg_{diast}$)
- Tachyarrhythmia or bradyarrhythmia
- Hypertrophic cardiomyopathy and other forms of outflow tract obstruction
- High-grade AV block
- Recent stroke or transient ischaemic attack
- Uncorrected illnesses such as significant anaemia, significant electrolyte imbalance and hyperthyroidism

Criteria for discontinuing ergometric stress:

Criteria for discontinuing the stress ECG

- Maximum exertional heart rate reached
- Occurrence of angina pectoris
- ST depressions by more than 0.25 mV horizontally or descending
- Arrhythmias (extrasystoles or salvos)
- 2nd or 3rd degree AV block
- Atrial fibrillation or flutter
- Complete bundle branch block
- Blood pressure increase over 230/120 mmHg systolic/diastolic
- Technical problems (faulty ECG recording, monitor breakdown)

To be able to promptly identify these criteria, the ECG must be continuously observed on a monitor during and after the stress.

Take note of the indications and contraindications listed in the medical literature as well.

Cardio***Air Plus*** may only be used to conduct and evaluate resting and stress ECGs and for functional diagnostic investigations of the cardiovascular system.
The device is not intended for monitoring vital signs.

Noninvasive blood pressure measurements are not permitted
- in patients with sickle cell anaemia and
- if skin lesions are expected.

Side effects

If the suction electrodes are applied for a longer period (approx. more than 1 hour, depending on the patient) and high vacuum, haematomas may develop. Never turn the vacuum dial to the upper range in the case of patients with sensitive skin.

Application information

2

Prior to using the device on a patient, the user should become familiar with the instructions for use and individual examination methods to be used as well as the indications/contraindications, warnings and application information. Additional sources of information about the application should be followed.

Cardio***Air***

- For the safety of the patient,10k Ohm protective resistors are installed in the ECG suction lines.
- Protection from defibrillator voltages is provided by the connected ECG device.

Cardio***Air Plus***

- All patient inlets are protected against defibrillation voltages.
- ECG electrodes must be applied at a distance of at least 15 cm from defibrillator electrodes.
- There is no hazard if the Cardio***Air Plus*** is used on cardiac pacemaker patients or if other stimulation devices are also used. However a certain degree of caution should be used. The stimulation devices should only be used at an adequate distance from the lead electrodes. In cases of doubt, the patient should be disconnected from the recording device.
- Electrostimulation devices and/or cardiac pacemakers can cause the ECG signal to be distorted.
- For example, overloading the ECG amplifier during or directly after a defibrillation is shown by red lines instead of the ECG waves.
- The heartbeat and heart rate display can be impaired by the pulse from a cardiac pacemaker or by atrial fibrillation.

Cardio***Air*** and Cardio***Air Plus*** are not intended for use during HF surgery.

Cardio***Air*** and Cardio***Air Plus*** are not suitable for direct application on the heart.

Prior to the examination, patients should be informed of the objectives and course of the examination as well as their cooperative participation.

The power supply of the computer connected to Cardio***Air Plus*** must correspond to the international device standard IEC 60950 or European standard EN 60950.

Caution!

Before use, ensure that the device is powered via a properly grounded mains socket (electrical installation according to DIN VDE 0100 Part 710). The device must only be operated with the supplied power cable. The power cable must be protected against mechanical stress.

Caution!

Prior to use, it should be ensured that the necessary isolation barriers between Cardio***Air Plus*** and the mains as well as any connected networks are in place.

- If the computer to which the Cardio***Air Plus*** is connected via a USB cable is not a medical PC and does not have any equivalent isolation, a USB isolator with an isolation barrier of at least 1.5 KV must be used between the Cardio***Air Plus*** and the computer.

- If the computer to which the Cardio***Air Plus*** is connected via a USB cable is connected to a network, there must be an insulation barrier of at least 1.5 KV between the Cardio***Air Plus*** and the network.
- If Cardio***Air Plus*** is wirelessly connected to the computer, the wireless connection is the necessary isolation barrier.

The external power supply of the Cardio***Air*** and Cardio***Air Plus*** must be located outside of the patient environment. (Does not apply when the move ***Air*** device trolley is used)

Caution!

Magnetic and electrical fields can affect the function of the device. For this reason, do not operate Cardio***Air*** and Cardio***Air Plus*** in the vicinity of devices which generate strong electromagnetic fields (X-ray or diathermy equipment, MRI machines, transformers, motors). Please keep a safe distance of several meters.

Cardio***Air*** and Cardio***Air Plus*** are not suitable for use in areas with an explosive, flammable or combustive atmosphere.

During use, the device is to be located in a position allowing direct access to the device´s central mains supply so that it can be disconnected from the mains at any time.

To avoid the risk of electric shock, the plug must be disconnected from the mains supply before performing any cleaning or maintenance activities.

Inspect the device before use. If there is any damage, it must not be used.

Skin preparation

Careful electrode placement is required to ensure a fault-free ECG. For this reason, you should pay particular attention to the "electrode placement" chapter.

The signal quality improves if problematic hair is shaved off and the skin surface is rubbed with fine fleece or fabric. Alcohol can be used for cleaning. (Concentration max. 30%).

Contact agent

Use the contact agent sparingly. Never spray contact spray into the electrode, instead spray it directly on the skin. Do not use any electrode cream or electrode gel. Use only contact agent from Zimmer MedizinSysteme GmbH, since this will ensure compatibility and safe function. Using contact agent from other manufacturers voids the guarantee.

Clean and disinfect the electrodes according to the “Cleaning and disinfection” section.

Extremity electrodes

Extremity electrodes during a resting ECG

To record extremity leads, the extremity electrodes should be applied as follows:

R	●	Red	Right arm electrode
L	●	Yellow	Left arm electrode
F	●	Green	Left foot electrode
N	●	Black	Right foot electrode

Extremity electrodes during a stress ECG

During ergometry, the electrodes should not be applied over active muscles. Appropriate placement sites for the extremity electrodes N and F are above the left and right iliac crest. The R and L electrodes are best applied to both shoulder blades.

Chest electrodes according to Wilson

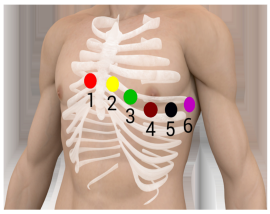

To record Wilson leads, the electrode connections C1 to C6 should be placed at the following sensing sites:

C1	●	Red	Right sternal edge in the 4th intercostal space
C2	●	Yellow	Left sternal edge in the 4th intercostal space
C3	●	Green	Between C2 and C4 on the left on the 5th rib
C4	●	Brown	Left midclavicular line in the 5th intercostal space (approximately at the cardiac apex)
C5	●	Black	Left anterior axillary line in a line running horizontally through C4
C6	●	Purple	Left mid axillary line in a line running horizontally through C4

Bipolar electrodes according to Nehb

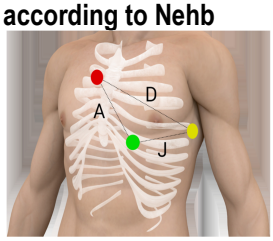

The Nehb leads are recorded with the following electrodes:

R	●	Red	Right sternal base of the second rib (NST)
L	●	Yellow	Site of projection of the cardiac apex on the left axillary line (Nax)
F	●	Green	Over the cardiac apex (Nap)
N	●	Black	Above the right leg

The combination of the three electrodes R, L, F at these positions yields leads D, A, J.

Placing the electrodes

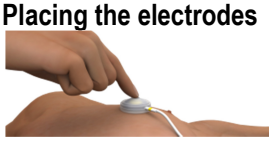

- Turn the dial (7) to approximately the centre position.
- Spray some contact spray on the intended recording site on the skin. Never spray in the suction dome.
- Place the electrode on the recording site and gently press on the suction dome.
- By pressing on the suction dome, the automatic valve in the electrode opens and the pump starts.
- To correct the electrode placement, press on the side of the suction dome. This will allow the electrode to be removed. Place the electrodes on the desired site by pressing gently on the suction dome once again.
- Adjust the suction capacity and thus the vacuum on the patient in each case.

Placing the electrode cables

For a fault-free ECG, it is important to place the electrode cables properly.

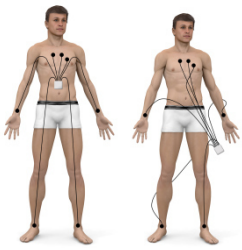

Correct Incorrect

Distortions due to electromagnetic fields caused by live cables and loads can be reduced through appropriate arrangement of the electrode cable by minimising the loop size responsible for the interference.

Note

During ergometry, the electrodes should not be applied over active muscles.

General safety information

- Cardio***Air*** / Cardio***Air Plus*** should be operated only in accordance with these instructions for use. Any other use is at the operator's responsibility.
- For maintenance measures, expansions, readjustments or modifications, the provisions of the German Medical Devices Act (MPG) and the Medical Device Operator Ordinance apply.
- According to the Medical Device Operator Ordinance, medical devices may be set up, operated and used only by persons who have the necessary training or knowledge and experience to do so.
- The device may not be used for the exclusive monitoring of vital signs.
- During use, skilled medical staff must monitor the patient.

Safety information for set-up and installation

- The environmental conditions indicated in the "Technical information" chapter must be observed.
- The device may not be operated in a wet, humid or dusty environment. Avoid exposing the device to direct sunlight or heat from other heat sources. Acidic vapours or liquids should not come into contact with the device under any circumstances, since irreparable damage could occur.
- Cardio***Air*** / Cardio***Air Plus*** is not intended for sterile use.
- The device may not be used if there are any doubts regarding the insulation to ground, the proper condition of the power cable or other connection cables.
- Before connecting of the device the mains supply, it should be checked whether the mains voltage and mains frequency indicated on the identification plate match the values of the mains supply. If there are any deviations, the device should not be connected to the mains supply.
- No extension cables with multiple sockets should be used to supply power.

Hazards to persons

- Conductive parts of electrodes and connector systems of the applied parts connected to them, including the neutral electrode, may not come into contact with any other conductive parts, including ground.
- It should be ensured that neither the patient nor the conductive parts of the patient connection or the electrodes (including the neutral electrode) come into contact with other conductive objects (even if these are grounded) or persons.
- No liquid should penetrate the suction system. If liquid penetrates the system, it should not be operated again until it has been examined by customer service.

Connection with other devices

- Additional equipment connected to the analogue and digital interfaces of the Cardio***Air*** and Cardio***Air Plus*** must demonstrably meet its corresponding EN specifications (e.g. EN 60950 for data-processing devices and EN 60601 for electromedical devices). In addition, all configurations must satisfy the system standard EN 60601-1-1. Anyone connecting additional devices to signal inputs or signal outputs is a system configurer and thus responsible for ensuring compliance with system standard EN 60601-1-1.
- Devices may only be connected to each other or with parts of systems if it is ensured that the safety for the patient, the user and the environment is not impacted by this coupling.
- It should be ensured that each device is connected to a wall socket.
- Provided that safe coupling is not readily apparent from the device data, the user must ensure, by contacting the respective manufacturers or inquiring with a qualified person, that the necessary safety for the patient, the user and the environment is not impaired by the intended coupling.
- For this reason, also be aware of a possible hazard due to accumulation of leakage currents.
- The use of components (including software) which is not included in the scope of delivery or not approved by Zimmer MedizinSysteme GmbH for Cardio***Air Plus*** may lead to measurement errors and malfunctions.
- Only original accessories and original spare parts from Zimmer MedizinSysteme GmbH may be used.

What is Cardio***Air***?

Cardio***Air*** is an electrode suction system for the convenient application of ECG electrodes and for recording electrocardiograms.

What is Cardio***Air Plus***?

Cardio***Air Plus*** is an ECG system which comprises a suction system for the convenient application of ECG electrodes, an integrated ECG amplifier for the acquisition of ECG signals and ECG analysis software for the visualisation, storage and assessment of the measurement results.

What do Cardio***Air*** and Cardio***Air Plus*** **do**?

Cardio***Air*** and Cardio***Air Plus*** achieve excellent signal quality as a result of the secure positioning of the electrodes and feature fast and convenient handling.

What are the benefits of Cardio***Air*** and Cardio***Air Plus***?

- With the aid of a continuously adjustable vacuum, the electrodes are easily and gently attached to the skin.
- A movable hinged arm facilitates easy handling and electrode application.
- A modern and intuitively operated analysis software is easy to learn and it provides high-quality results.
- Stationary mounting on vertical legs of examination beds, tables and walls offer a variety of options for use.
- Adaptation to a mobile device trolley enables mobile operation.

Intended use

The electrode suction system Cardio***Air*** is used to record resting and stress ECGs in connection with an external ECG device.

The Cardio***Air Plus*** electrocardiography system allows the recording and analysis of resting and stress ECGs with the aid of an electrode suction system.

Note:

⚠

The application of the device is reserved for medical professionals (such as physicians and health paraprofessionals).

Mount extension arm on stand

Mount - as described on page -B- - the extension arm on the stand.

Mounting on an examination bed or table leg

Cardio***Air*** / Cardio**Air *Plus*** can be mounted on a vertical round or rectangular tube of an examination bed or table.

- The examination bed attachment is screwed onto the tube with both clamping plates using the four hex screws.
- The necessary edge length or diameter of the tube is two to five centimetres.
- Unscrew both knobs from the thread.
- Guide the power supply cable from above through both gaps of the examination bed attachment so that the power supply cable runs in the centre through the round openings of the examination bed attachment.
- Guide the stand from above through the examination bed mount.
- Position the stand at the desired working height and secure it by turning both knobs.

Tabletop

Using the table attachment, Cardio***Air*** / Cardio**Air *Plus*** can be attached to a tabletop.

- The maximum thickness of the tabletop is 6 cm. It should be ensured that the tabletop and its base provide sufficient stability.
- The table attachment is pushed sideways on the tabletop and screwed to the table using the knob.
- Guide the power supply cable and the stand through the opening between the brackets and the table attachment.
- Position the stand at the desired working height and secure it by screwing on both brackets using the associated screws.

Wall mount

- When mounting on the wall, the desired mounting height should first be determined.
- Then the wall rail is attached to the wall using anchors and suitable screws.
- Then insert the adapter from above into the corresponding slot on the wall rail and secure the adapter with both screws on the front of the adapter.
- Insert the extension arm from above into the adapter and secure it using the screw on the side of the adapter.
- Insert both ends of the power supply cable into each other and place the cable connection in the coupling. Check the proper positioning and fasten the coupling with the screw.
- Clip the cable guides to the wall rail at the desired height and thus secure the power supply cable and, if applicable, the ECG or USB cable.

Mounting on a device trolley

- Several options are available for mounting the Cardio***Air*** and Cardio***Air Plus*** on a device trolley.
- On the move ***Air*** device trolley, Cardio***Air*** and Cardio***Air Plus*** are secured to the stand of the move ***Air*** device trolley by affixing the extension arm.
- If the device trolley has a vertical frame with a round or rectangular profile, Cardio***Air*** and Cardio***Air Plus*** can be mounted on the vertical profile using the examination bed attachment.
- If the device trolley has a stable tabletop, Cardio***Air*** and Cardio***Air Plus*** can be secured to it using the table clamp.

Connect electrode cables

Insert each of the electrode cables (2) with its plug into the intended port on the electrode distributor (3).

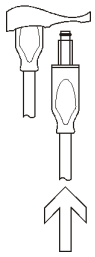

Press the plug gently into the port and ensure that it is inserted correctly and with the proper orientation. Otherwise, it may lead to leakages and contact problems.

Make sure that you do not mix up the electrode cables. The names of the individual connections are on the electrode distributor (3).

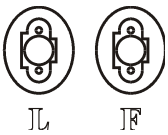

If you would like to remove the electrode cables from the electrode distributor, always grasp the electrode cables on their plug housing and never pull on the cable.

Establishing power supply, switching on, switching off

- The suction system is supplied with electrical energy via the power supply provided. For this purpose, connect the mains cable to the mains supply.
- If the move ***Air*** device trolley is used, switch on the power supply at the power switch (36).
- Turning the dial (7) of the electrode distributor (3) clockwise switches Cardio***Air*** and Cardio***Air Plus*** on.
- By contrast, turning the dial (7) counterclockwise switches Cardio***Air*** and Cardio***Air Plus*** off. At first, any vacuum set will be reduced and then the device switches off.

Note

The mains voltage and mains frequency must match the values indicated on the identification plate.

System requirements

During the ECG recording, Cardio***Air Plus*** sends the ECG signals at a high speed to the PC. There the ECG signals are received, processed, filtered, analysed and displayed in a user-friendly fashion in real time. For this reason, there are high performance requirements on the data transmission and on the PC.

The exact hardware and software requirements for the PC can be found in the Diagnostik*Suite* instructions for use.

USB connection to PC

Cardio***Air Plus*** can be connected to the PC via a USB cable. Due to the high data rate during an ECG transmission, the ECG amplifier must be directly connected to the PC. USB hubs or other devices connected in between the amplifier and PC are not permitted since they may impair safe operation.

During initial USB connection of the Cardio***Air Plus*** to the PC, any necessary drivers will be loaded by Windows.

Bluetooth connection to PC

Cardio***Air Plus*** can optionally send the ECG signals to the PC via Bluetooth. If the PC does not have any internal Bluetooth interface, a Bluetooth USB stick can be used. For this purpose, install the corresponding device driver on the PC.

Coupling with the PC

- Remove any USB cable connected to Cardio***Air Plus*** and establish the power supply of the Cardio***Air Plus***. The connection LED (3) will then be lit and blue.
- Start "Devices and Printers" in the Windows control panel or directly via the context menu of the Bluetooth symbol in the toolbar of the Windows function "Add a Bluetooth device".
- In the Windows dialogue box "Add a device", Cardio***Air Plus*** is now listed as "CardioAir+" with an appended serial number. After selecting "CardioAir+ and pressing the "Continue" button, the ECG amplifier can be connected to the PC in the next dialogue box by selecting "Couple without code".
- Bluetooth devices coupled with the PC are listed in "Control Panel | Hardware and Sound | Devices and Printers | Bluetooth Devices".
- The type of coupling of a Bluetooth device may vary, depending on the Windows version.

Interface configuration on the PC

- Start the "Diagnostik*Suite*" ECG analysis software on the PC. As ECG device, select "Cardio***Air Plus"*** and adjust the associated device interface.
- Devices connected via USB will be shown as "file://LW:\". "LW" stands for a Windows driver letter.
- Devices connected via Bluetooth are displayed with their Bluetooth address, the device name and their serial number. (Example: “bth://00:12.f3:23:d5:ba (CardioAir+ 1420011060)”)

Switch device on

- The move ***Air*** device trolley is switched on at the power switch (36).
- Turning the dial (7) of the electrode distributor (3) clockwise switches Cardio***Air*** and Cardio***Air Plus*** on.

Position electrode distributor

To maintain the most optimal position of the electrode distributor over the patient, the extension arm can be rotated horizontally 300°. In addition, the height of and distance between the electrode distributor and the patient can be individually adjusted.

Start ECG recorder

Cardio***Air***

- Start the ECG recording on the connected ECG device.

Cardio***Air Plus***

- Start the analysis software "Diagnostik*Suite*" on the PC.
- Open the data of the desired patient and in the "NEW" register of the navigation menu within the "ECG examination" panel, start the function "New resting ECG" or "New ergometry".
- By pressing the toolbar button "Start", the ECG recorder is started and the ECG is recorded.
- During an ECG recording, the data transmission LED (8) flashes on the electrode distributor (3).

Adjust vacuum for electrodes

- To adapt the ECG suction electrodes on the skin, the desired suction pressure should be adjusted using the dial (7) of the electrode distributor (3).
- Turning the dial (7) clockwise increases the suction pressure; turning counterclockwise decreases the suction pressure.
- The level of suction pressure set is shown on the electrode distributor (3) by means of the vacuum LEDs (9).

Perform examination

- Now place the suction electrodes (1) on the patient's skin. Apply all electrodes to the patient.
- The suction pressure can be adjusted at any time if needed by turning the dial (7).
- Now perform the desired electrocardiographic examination, analyse the ECG and save the results.

Removing suction electrodes, automatic purging

- Switch off the suction system by turning the dial (7) counterclockwise.
- To easily detach the electrodes from the patient and to purge the electrodes, Cardio***Air*** / Cardio***Air Plus*** generates an overpressure for a few seconds. This can be seen on the vacuum LEDs (9) by a backwards LED display.
- Detach the electrodes from the patient.

Automatic drying

- Cardio***Air*** / Cardio***Air Plus*** monitors whether moisture has penetrated the electrode distributor (3). If so, the moisture LED (10) is lit and yellow.
- If moisture is present, Cardio***Air*** / Cardio***Air Plus*** starts a drying process following the automatic purging. In doing so, the suction lines are purged alternately over a longer period of time.

Leak

If a leak in the pneumatic system occurs during application of the electrodes or recording of the ECG, the vacuum is switched off and the vacuum LEDs flash.

Caution!

The electrode cables (2) must hang downwards after each use so that any residual liquid present can drain out of the cables.

Power supply	100-240 V (AC) ± 10%, 50-60 Hz		
Mains fuse	2 x T6,3A, 250V (applies to move ***Air*** device trolley)		
Power consumption	500 mA, plus the current consumption of the devices connected at the IEC power plug of the move ***Air*** device trolley		
Dimensions	Mounting on examination bed, wall or table Extension arm (LxWxH) Total height (H) Mounting on move ***Air*** device trolley Dimensions (LxWxH)	 110 cm x 16 cm x 37 cm 168 cm 48 cm (with extension arm 133 cm) x 65 cm x 195 cm	
Weight	Mounting on examination bed, wall or table 7 kg without mounting accessories Mounting on move ***Air*** device trolley 24 kg without accessories		
Environmental conditions Operation	Temperature Air pressure Relative humidity without condensation	+10°C to +30°C 700 hPa...1060 hPa 20%... 95%	
Environmental conditions Storage and transport	Temperature Air pressure Relative humidity without condensation	-10°C to +40°C 700 hPa...1060 hPa 10%...90%	
Interfaces	Cardio***Air*** 15-pin sub-D device plug with the following assignment:	Pin 1: C2 Pin 2: C3 Pin 3: C4 Pin 4: C5 Pin 5: C6 Pin 6: screen Pin 7: free Pin 8: free	Pin 9: R Pin 10: L Pin 11: F Pin 12: C1 Pin 13: free Pin 14: N Pin 15: free
	Cardio***Air Plus*** (Depending on the model)	USB 2.0 Bluetooth 2.1 EDR, class 1, frequency 2.402 – 2.480 MHz, max. output power 6 dBm / 4 mW	
	move ***Air*** device trolley	Equipotential bonding according to DIN 42801	

Electrode distributor	10 pluggable electrode cables 10k Ohm protective resistor in each electrode cable	
Electrodes	Silver/silver chloride electrodes	
Vacuum	Continuously adjustable from 30 to 200 hPa (± 10%)	
Mechanical data	Extension arm, reach	Up to 110 cm
	Extension arm, working height	Adjustable, depends on the installation type and height
	Extension arm, horizontal range of rotation	300°
	Length of electrode cables	Chest: 120 cm Extremities: 140 cm
Signal transmission Cardio***Air Plus***	Number of ECG channels	12 leads from Einthoven I, II, Wilson C1-C6
	Sampling rate	500 Hz
	Signal bandwidth	0.05 to 150 Hz
	Detection of pacemaker pulses	Pulse duration 0.1 to 2 ms Amplitude ± 2 mV to ± 700 mV
	Input impedance of the signal inputs	> 50 MΩ
	AD converter	16 / 24 bit, depending on the sampling rate
Electrical safety	Patient input circuit	Fully isolated and galvanically separated
	Defibrillation protection	Cardio***Air***: - Cardio***Air Plus***: yes (5000V)
	Safety class	Type CF according to EN 60601-1
	Device class	IIa according to MPG
	Protection class	I

Subject to changes

Storage and transport Please keep the packaging. The device may be shipped and stored only in the original packaging.

Cardio***Air***, Cardio***Air Plus*** and also any accessory parts should be regularly cleaned, including daily in the case of daily use.

General information

- Before cleaning, the device must be switched off and the mains plug should be disconnected.
- No high-temperature sterilisation (such as autoclaving) should be performed, nor should sterilisation with electromagnetic radiation or gamma rays be performed.
- Do not use any cleaning agents or disinfectants which contain alcohol or solvents.
- Under no circumstances should the device be immersed in a cleaning fluid or subjected to heat sterilization with water, steam or air.
- Cardio***Air*** / Cardio***Air Plus*** has no special protection against leaking liquids or the penetration of water or other liquids. If Cardio***Air*** / Cardio***Air Plus*** was immersed in a liquid or a liquid was spilled on it, it should in no case be put back into operation. If liquid penetrated the device, pull out the mains plug and contact Zimmer customer service.

Cleaning the housing

- Water and soap or commercially available, solvent-free plastic cleaning agents can be used for cleaning.
- Clean the housing of the Cardio***Air*** / Cardio***Air Plus*** carefully using a soft, lint-free cloth moistened with mild, non-acidic (!) cleaning agent. Then dry using an antistatic cloth.
- Ensure that no liquid penetrates the device.
- Aggressive cleaning agents or solvents (acetone, paint thinners, diluted acids, bases, etc.) should not be used either for cleaning or for disinfection!

Disinfection of housing and cables

The device can be disinfected with alcohol-free and solvent-free disinfectants. To do so, wipe the surface of the device with a cloth moistened with disinfectant.

The electrode cable is considered to be non-critical with regard to hygiene, according to RKI guidelines, due to the use on uninjured and healthy skin.

Cleaning / Care

- The electrodes and suction domes must be cleaned after each ECG/ergometry using a lint-free cloth.
- Clean the electrodes and the suction domes additionally once per day in a cleaning bath (cold or lukewarm water) and, if necessary, Zimmer cleaning fluid in a mixing ratio of 1:3-5 in a plastic container.
- Cardio***Air*** / Cardio***Air Plus*** assists the user with a special cleaning program. Hang the suction domes to be cleaned (1) in a container filled with water without taking the electrode cables (2) out of the electrode distributor (3). Now press the dial (7) on the electrode distributor from below. As a result, the electrodes will alternately be purged and cleaned.
- Remove contamination using a silicone brush.
- Avoid persistent stubborn dirt through daily cleaning.

Dry the electrodes carefully and allow the electrodes to then hang downwards so that any residual liquid present can drain out of the cables.

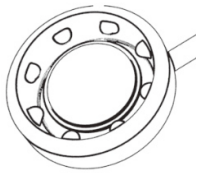

Ensure that the inner sealing lip of the suction dome fits evenly on the electrode core so that the system does not draw in any additional air and is sealed.

Do not use a metal container for the cleaning bath.

While the suction domes are in the cleaning bath, never turn the dial (7) to adjust a vacuum because cleaning fluid would then be drawn into Cardio***Air*** / Cardio***Air Plus***.

If there should be any liquid in the electrode distributor, Cardio***Air*** / Cardio***Air Plus*** indicates this by a red, flashing moisture LED. In this case, do not operate Cardio***Air*** / Cardio***Air Plus*** but instead contact customer service of Zimmer MedizinSysteme GmbH.

Disinfection

- We recommend that disinfection is to be carried out at least once a week, as well as if there is any indication of contamination. Consult with your hygiene specialist regarding this matter. Always perform cleaning prior to disinfection.
- Use a commercially available alcohol-free disinfectant for metal and plastic, with bactericidal, virucidal and fungicidal properties. Proceed as if performing cleaning; use a disinfectant instead of the cleaning bath. In doing so, take note of the manufacturer's information for dosing and contact time.
- After using disinfectants, the electrode must be rinsed with plenty of clean water.

CE mark

9

The device has a CE mark

CE 0123

in accordance with the EC directive 93/42/EEC.

Scope of delivery Cardio***Air***	Item no. *1)	Number	Description

4520-X01 *2) Cardio***Air** with examination bed mount:

Item no.	Number	Article / Description
91 121 010	1	Examination bed mount
65 122 310	2	Cable mount on the stand
10 102 498	1	Mounting instruction

4520-X02 *2) Cardio***Air** with wall mount:

Item no.	Number	Article / Description
91 122 010	1	Wall mount
10 102 496	1	Mounting instruction

4520-X03 *2) Cardio***Air** with table mount:

Item no.	Number	Article / Description
91 123 010	1	Table mount
65 122 310	2	Cable mount on the stand
10 102 497	1	Mounting instruction

4520-X04 *2) Cardio***Air** with move ***Air*** device trolley

Item no.	Number	Article / Description
916	1	move ***Air*** device trolley
65 122 310	2	Cable mount on the stand
10 102 679	1	Mounting instruction

4520	1	Cardio***Air***
91 120 220	1	Arm
95 760 152	1	Electrodes and cable set consisting of:

Item no.	Article / Description		
524 528 06	Electrode cable C1,	red,	120 cm
524 528 16	Electrode cable C2,	yellow,	120 cm
524 528 26	Electrode cable C3,	green,	120 cm
524 528 36	Electrode cable C4,	brown,	120 cm
524 528 46	Electrode cable C5,	black,	120 cm
524 528 56	Electrode cable C6,	violet,	120 cm
524 528 66	Electrode cable F,	green,	140cm
524 528 76	Electrode cable R,	red,	140cm
524 528 86	Electrode cable L,	yellow,	140cm
524 528 96	Electrode cable N,	black,	140cm
524 000 00	Brush		

416	1	Contact fluid for ECG electrodes 250 ml
53 804 700	2	Cable comb, double
53 804 710	2	Cable comb, triple
101 209 14	1	Instructions for use Cardio***Air*** / Cardio***Air Plus***

Scope of delivery Cardio***Air Plus***	Item no. *1)	Number	Description

4530-X01 *2) — Cardio***Air Plus*** Bluetooth with examination bed mount:

Item no.	Number	Article / Description
91 121 010	1	Examination bed mount
10 102 498	1	Mounting instruction

4530-X02 *2) — Cardio***Air Plus*** Bluetooth with wall mount:

Item no.	Number	Article / Description
91 122 010	1	Wall mount
10 102 496	1	Mounting instruction

4530-X03 *2) — Cardio***Air Plus*** Bluetooth with table mount:

Item no.	Number	Article / Description
91 123 010	1	Table mount
10 102 497	1	Mounting instruction

4530-X04 *2) — Cardio***Air Plus*** Bluetooth with move ***Air*** device trolley

Item no.	Number	Article / Description
916	1	move ***Air*** device trolley
10 102 679	1	Mounting instruction

4530	1	Cardio***Air Plus*** Bluetooth
91 120 210	1	Arm
95 760 152	1	Electrodes and cable set consisting of:

Item no.	Article / Description		
524 528 06	Electrode cable C1,	red,	120cm
524 528 16	Electrode cable C2,	yellow,	120 cm
524 528 26	Electrode cable C3,	green,	120 cm
524 528 36	Electrode cable C4,	brown,	120 cm
524 528 46	Electrode cable C5,	black,	120 cm
524 528 56	Electrode cable C6,	violet,	120 cm
524 528 66	Electrode cable F,	green,	140 cm
524 528 76	Electrode cable R,	red,	140 cm
524 528 86	Electrode cable L,	yellow,	140 cm
524 528 96	Electrode cable N,	black,	140 cm
524 000 00	Brush		

416	1	Contact fluid for ECG electrodes 250 ml
53 804 700	2	Cable comb, double
53 804 710	2	Cable comb, triple
10 120 914	1	Instructions for use Cardio***Air*** / Cardio***Air Plus***
79 090 903	1	USB Bluetooth Adapter
76 000 481 *2)	1	DiagnostikSuite on USB-Stick
10 102 737 *2)	1	Instructions for use Diagnostik*Suite*, basic software
10 102 738 *2)	1	Instructions for use Diagnostik*Suite*, ECG

Scope of delivery / Accessories / Consumables

10

Accessories	Item no. *1)	Number	Description
	9202	1	Diagnostik*Suite*, basic software
	9205	1	Diagnostik*Suite*, ECG
	9205-01	1	Automatic measurement and interpretation of resting ECGs for Diagnostik*Suite*, ECG
	9205-02	1	Ergometry for Diagnostik*Suite*, ECG
	91 121 010	1	Examination bed mount
	65 122 310	1	Cable mount on the stand
	91 122 010	1	Wall mount
	91 123 010	1	Table mount
	79 060 650	1	USB isolator 4 kV

Additional accessories are available from Zimmer MedizinSysteme GmbH.

Consumables	Item no. *1)	Number	Description
	409	1	Cleaning fluid for electrodes, 1 L
	416	1	Contact fluid for ECG electrodes 250 ml
	417	1	Contact fluid for ECG electrodes 5 L
	51 900 000	1	Dosing pump for 5-L canister of contact fluid
	99 203 100	1	Cleaning cloth
	94 760 000	1	Cleaning fleece

*1) Subject to technical changes
*2) Depending on order

Device combinations

11

Cardio***Air*** can be used in combination with many commercially available ECG devices.

- The assignment of the connecting cable is described in the technical data.

Please take note of the instructions for use of the combined devices.

⚠ Anyone who combines devices against these guidelines and thus creates a medical system does so under his/her own responsibility.

Also be aware of a possible hazard due to accumulation of leakage currents.

When combining devices, observe the specifications of standard DIN EN 60601-1 as well as the warnings on connection with other devices.

Safety

Cardio**Air** and Cardio***Air Plus*** are manufactured according to the DIN EN 60601-1 safety regulations.

As the manufacturer, Zimmer MedizinSysteme GmbH can only consider itself to be responsible for safety and reliability if the points below are observed:

- Cardio***Air*** / Cardio***Air Plus*** should be operated only in accordance with the instructions for use.
- Extensions, readjustments, repairs or modifications may be carried out on the device only by persons authorised by Zimmer MedizinSysteme GmbH.
- The user must ascertain the functional safety, the proper operating condition and mechanical integrity of the device before each use.
- The device is operated only by appropriately qualified personnel.
- The device is operated in dust-free areas not at risk of explosion and/or non-combustive atmospheres.
- The device is immediately disconnected from the mains when penetrated by liquid.

Maintenance

Cardio***Air*** and Cardio***Air Plus*** do not contain any parts which need to be repaired or maintained by the operator.

The device is not listed in either in attachment 1 or in attachment 2 of the MPBetreibV (Medical Device Operator Ordinance).

In Germany, the German Social Accident Insurance (DGUV) Regulation 3 (Electrical systems and equipment), as amended, must be observed.

Note: This information applies to the operation of the unit in Germany. Please consider divergent national regulations in your country, if applicable.

Functional test

Preparation

- Connect the device to the mains supply.
- If the move ***Air*** device trolley is used, switch on the power supply at the power switch (36).

Cardio***Air***

- Connect Cardio***Air*** with the ECG device and start the ECG device.

Cardio***Air Plus***

- In the case of Cardio***Air Plus***, install the “Diagnostik*Suite*” on the PC, establish the data connection with the PC and start the Diagnostik*Suite* on the PC.

Switching on

- The device is switched on by turning the dial (7) on the electrode distributor (3) clockwise.

Functional test Electrode application

- Adjust a medium suction capacity using the dial (7).
- The vacuum LED display (9) indicates the level of suction capacity set.
- Spray some contact spray on the ECG recording site on the hand or arm. Apply the electrode to be tested (1) on the ECG recording site.
- To adjust the vacuum, turn the dial (7) clockwise until the maximum suction capacity has been reached. The indentation on the suction dome (1) of the electrode must visibly enlarge.
- Reduce the vacuum by turning counterclockwise to a low suction capacity. The indentation on the suction dome (1) must become visibly smaller.
- Switch off the generation of the vacuum by turning the dial (7) counterclockwise. If a vacuum was set for longer than 10 seconds, the suction electrodes are now automatically purged and detach from the ECG recording site.
- You can perform this test with all electrodes individually or together.

Functional test of the ECG recording

- In the case of Cardio***Air***, start the ECG recording on the connected ECG device or in the case of Cardio***Air Plus***, on the PC.
- Check the ECG quality as well as the display of electrodes which have fallen off.
- Switch off the generation of the vacuum by turning the dial (7) counterclockwise.

Note

- Before every use, visually inspect the device for damage.
- If you should identify any damage or functional problems, you should not put the device back into operation until it has been repaired by the service department of Zimmer MedizinSysteme GmbH.

Typical sources of error

The following causes may be responsible for inaccurate measurements or inaccurate evaluations of measured values and non-evaluable results:

- Use of the device outside of the areas of application described in the instructions for use
- Use of the device despite functional problems
- Improper handling
- User errors, mistakes on the part of the user

Error	Possible cause	Remedy
It is not possible to switch the device on	No connection to the power grid	Check whether mains voltage is present at the socket. Check whether the mains cable is plugged in and the device is switched on.
CardioAir *Plus* has no connection to the PC	USB cable is not connected to the PC	Check whether the USB cable is properly connected to the PC.
	No radio contact with the PC	Establish the radio contact and in the case of Bluetooth, connect Cardio ***Air Plus*** to the PC.
	The PC is switched off	Start the PC.
Electrodes fall off, pump does not run	No vacuum is set	Turn the dial for vacuum (7) clockwise.
	Mains power interrupted	Check power supply of the power outlet, check positioning of the mains plug in the power outlet.
	Pump defective	Contact Zimmer MedizinSysteme GmbH for assistance.
Electrodes fall off, pump runs briefly each time	Contamination or moisture in the valve	Briefly switch off suction capacity and switch back on.
	Electrode cable (2) not correctly inserted on distributor (3)	Check plug connection on the distributor.
	Electrode cable (2) is kinked	Lay electrode cable without kink.
	Electrodes do not adhere	Prepare ECG recording site for the ECG recording. Spray electrode spray on the ECG recording site. Increase vacuum.
	Leak in extension arm	Check whether a vacuum is created at the pump module. If so, contact Zimmer MedizinSysteme GmbH for further assistance.

All LEDs of the "vacuum" LED display are flashing	Leak in the vacuum system	Eliminate the leak (see above).
The ECG recording is distorted	Loose electrodes, insufficient electrode contact 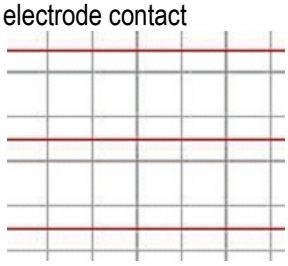	Check the electrode placement.
	Muscle tremors 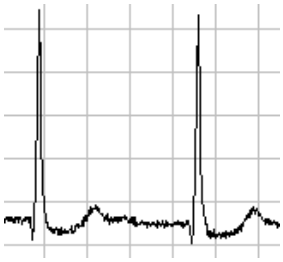	Superimposition of irregular "tremors" on the ECG. - Ensure that the patient is as relaxed as possible and is comfortably positioned (especially in the shoulder and neck region). The head should not be positioned too high. Place a knee roll under the knees of elderly patients. - The patient should not be cold. - During the ECG recording, movements should be avoided to the greatest possible extent and it should be ensured that the patient breathes evenly. - After **ruling out all sources of error**, activate the myogram filter to suppress muscle tremors.
	Disruptions in mains power 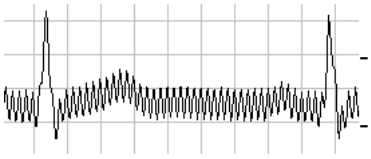	ECG superimposed with regular wavy lines. - Make sure that the patient is not touching any metal parts. - Remove any power cables running in the vicinity. - Move the examination bed away from the wall, if necessary. - Distortions due to electromagnetic fields caused by live cables and loads can be reduced through appropriate arrangement of the electrode cables and minimising the loop size responsible for the interference. - After **ruling out all causes of error**, activate the mains filter.

Error	Possible cause	Remedy
The baseline of the ECG wave "wanders" away from the middle	Superimposition of low-frequency interference 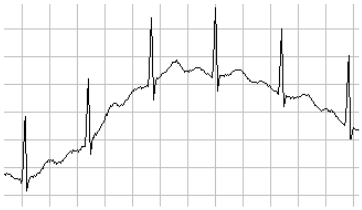	- Check the electrode contact. - Clean the electrodes. - After **ruling out all causes of error**, activate the baseline filter (anti-drift system)
The baseline of the ECG wave "jumps".	Cable artefacts are occurring.	- Place the electrode cables such that movements of the electrode cables are avoided.

Contact information

In the event of technical problems or interference, observe the explanations, descriptions and solutions in these instructions for use.

If you require support or if there is interference which cannot be corrected, please contact your sales consultant or, for matters of urgency, please contact the factory directly.

Zimmer MedizinSysteme GmbH
Junkersstraße 9
89231 Neu-Ulm
Germany
Telephone: +49 731 / 9761 - 0

Diagnostic hotline:
Telephone: +49 731 / 9761 - 115
Fax: +49 731 / 9761 - 4443

You can also receive support via email: support@zimmer.de
Visit us online at: http://www.zimmer.de

You will help us solve the problem if you have the following information at hand:
- Accurate description of the problem
- Serial number of Cardio***Air*** or Cardio***Air Plus***

Disposal

The device may only be returned to the factory in its original packaging. It must be disposed of by the factory in Neu-Ulm.

In foreign (European) countries please refer to national regulations for disposal. Contact your distributor if necessary.

Manufacturer's EMC declaration

16

Cardio***Air*** / Cardio***Air Plus*** is developed according to the recognized standards of technology. The information on the intended use of the components is taken into account.

Cardio***Air*** / Cardio***Air Plus*** must not be operated near active HF surgery devices or magnetic resonance tomography that can cause high levels of electromagnetic interference.

Cardio***Air*** / Cardio***Air Plus*** is exclusively for professional health care facilities such as hospitals provided and tested.

Cardio***Air*** / Cardio***Air Plus*** has no essential performance features that could be influenced by electromagnetic interference.

WARNING: Use of this equipment adjacent to or stacked with other equipment should be avoided because it could result in improper operation. If such use is necessary, this equipment and the other equipment should be observed to verify that they are operating normally.

The device Cardio***Air*** / Cardio***Air Plus*** contains no interchangeable components, cables or other that leads to a deterioration of the EMC.

WARNING: Use of accessories, transducers and cables other than those specified or provided by the manufacturer of this equipment could result in increased electromagnetic emission or decreased electromagnetic immunity of this equipment and result in improper operation.

WARNING: Portable RF communication equipment (including peripherals such as antennas) should be used no closer than 30 cm (12 inches) to any part of the device Cardio***Air*** / Cardio***Air Plus*** including cables specified by the manufacturer. Otherwise, degradation of the performance of this equipment could result.

The device was tested for RF immunity only at selected frequencies. Nearby transients at other frequencies may result in degraded operation. The frequencies tested are listed in Table 4.

The device Cardio***Air*** / Cardio***Air Plus*** does not contain any components which age over the course of the device life time and could lead to a deterioration of the electromagnetic compatibility. Thus, no maintenance is required during the life of the device to ensure basic safety. All tests according to standard IEC 60601-1-2 Ed. 4.0 and the requirements of EN 60601-2-25:2010 were performed. No other standards and regulations for electromagnetic compatibility have been applied.

Guidance and Manufacturing Declaration- Electromagnetic Emissions		
The device Cardio***Air*** / Cardio***Air Plus*** is intended for use in the electromagnetic environment specified below. The customer or user of the device Cardio***Air*** / Cardio***Air Plus*** should ensure that it is used in such environment.		
Emission Measurement	**Compliance**	**Electromagnetic Environment – Guidelines**
RF Emissions in accordane with CISPR 11	Group 1	The device Cardio***Air*** / Cardio***Air Plus*** must emit electromagnetic energy in order to ensure its intended function. Nearby electronic equipment may be affected.
RF Emissions in accordane with CISPR 11	Class **A**	The device Cardio***Air*** / Cardio***Air Plus*** is suitable for use in all establishments other than domestic and those directly connected to a low-voltage power supply network which supplies buildings used for domestic purposes. Note: The emissions characteristics of Cardio***Air*** / Cardio***Air Plus*** make it suitable for use in industrial areas and hospitals (CISPR 11 class A). If it is used in a residential environment (for which CISPR 11 class B is normally required) this equipment might not offer adequate protection to radio-frequency communication services. The user might need to take mitigation measures, such as relocating or re-orienting the equipment.
Emissions of Harmonics in accordance with IEC 61000-3-2	Class **A**	
Emissions of voltage fluctuations / flickers in accordance with IEC 61000-3-3	Complies	

Guidance and Manufacturing Declaration- Electromagnetic Immunity			
The device Cardio***Air*** / Cardio***Air Plus*** **device is intended for use in the electromagnetic environment specified below. The customer or user of the device** Cardio***Air*** / Cardio***Air Plus*** **should ensure that it is used in such environment.**			
Immunity Tests	**IEC 60601- Test Level**	**Compliance Level**	**Electromagnetic Environment – Guidelines**
Electrostatic Discharge (ESD) in accordance with IEC 61000-4-2	± 8 kV Contact Discharge ± 2 kV, ± 4 kV, ± 8 kV, ± 15 kV Air Discharge	± 8 kV Contact Discharge ± 2 kV, ± 4 kV, ± 8 kV, ± 15 kV Air Discharge	Floors should be made of wood, concrete or ceramic tiles. If floors are covered with synthetic material, the relative air humidity must be at least 30%.
Electrical fast transient/ burst in accordance with IEC 61000-4-4	± 2 kV 100 kHz repetition frequency	± 2 kV 100 kHz repetition frequency	The quality of the supply voltage must correspond to that of a typical commercial hospital environment.
Surges in accordance with IEC 6100-4-5 -Line-to-Line-	± 0,5 kV, ± 1 kV	± 0,5 kV, ± 1 kV	
Surges in accordance with IEC 6100-4-5 -Line-to-Earth-	± 0,5 kV, ± 1 kV, ± 2 kV	± 0,5 kV, ± 1 kV, ± 2 kV	
Voltage dips in accordance with IEC 61000-4-11	0 % U_T; 0,5 cycle At 0°, 45°, 90°, 135°, 180°, 225°, 270° and 315°	0 % U_T; 0,5 cycle At 0°, 45°, 90°, 135°, 180°, 225°, 270° and 315°	The quality of the supply voltage must correspond to that of a typical commercial or hospital environment. If the user of the device Cardio***Air*** / Cardio***Air Plus*** requires continued operation even in the case of interruptions in the power supply, it is recommended to power Cardio***Air*** / Cardio***Air Plus*** from an uninterruptible power supply or a battery.
	0 % U_T; 1 cycle and 70% U_T; 25/30 cycles Single phase: at 0°	0 % U_T; 1 cycle and 70% U_T; 25/30 cycles Single phase: at 0°	
Voltage interruptions accordance with IEC 61000-4-11	0% U_T; 250/300 cycle	0% U_T; 250/300 cycle	
Magnetic field of supply frequency (50/60 Hz) in accordance with IEC 61000-4-8	30 A/m 50 Hz oder 60 Hz	30 A/m 50 Hz	Magnetic fields at the mains frequency should correspond to the typical values found in a business or hospital environment.
Note: U_T is the mains AC Voltage before application of the test level.			

Guidelines and Manufacturering Declaration – Electromagnetic immunity			
The device Cardio***Air*** / Cardio***Air Plus*** **device is intended for use in the electromagnetic environment specified below. The customer or user of the device** Cardio***Air*** **/** Cardio***Air Plus*** **should ensure that it is used in such environment.**			
Immunity Test	**IEC 60601- Test Level**	**Compliance Level**	**Electromagnetic Environment – Guideline**
Conducted Disturbances induced by RF fields according IEC 61000-4-6	3 V 0,15 MHz to 80 MHz 6 V in ISM Band between 0,15 MHz and 80 MHz 80% AM at 1 kHz	3 V 0,15 MHz to 80 MHz 6 V in ISM Band between 0,15 MHz and 80 MHz 80% AM at 1 kHz	In vicinity of devices, bearing the following symbol, interference is possible:
Radiated RF EM fields according IEC 61000-4-3	3 V/m 80 MHz-2,7 GHz 80% AM to 1 kHz	3 V/m 80 MHz-2,7 GHz 80% AM to 1 kHz	

Electromagnetic immunity to HF radio communication equipment						
Test Frequency (MHz)	**Band (MHz)**	**Service**	**Modulation**	**Maximum Energy (W)**	**Distance (m)**	**Immunity Test Level (V/m)**
385	380–390	TETRA 400	Pulse Modulation 18 Hz	1,8	0,3	27
450	430–470	GMRS 460, FRS 460	FM ± 5 kHz Derivation 1 kHz Sine	2	0,3	28
710	704–787	LTE-Band 13, 17	Pulse Modulation 217 Hz	0,2	0,3	9
745						
780						
810	800–960	GSM 800/900, TETRA 800, iDEN 820, CDMA 850, LTE-Band 5	Pulse Modulation 18 Hz	2	0,3	28
870						
930						
1720	1700–1990	GSM 1800; CDMA 1900; GSM 1900; DECT; LTE-Band 1, 3, 4, 25; UMTS	Pulse Modulation 217 Hz	2	0,3	28
1845						
1970						
2450	2400–2570	Bluetooth, WLAN, 802.11 b/g/n, RFID 2450, LTE-Band 7	Pulse Modulation 217 Hz	2	0,3	28
5240	5100–5800	WLAN 802.11 a/n	Pulse Modulation 217 Hz	0,2	0,3	9
5500						
5785						

Index

17

Cardio*Air*
CardioAir *Plus*

Instructions for Use

Zimmer MedizinSysteme GmbH
Junkersstrasse 9
89231 Neu-Ulm, Germany
Tel. +49 731. 97 61-291
Fax +49 731. 97 61-299
export@zimmer.de
www.zimmer.de

Zimmer
MedizinSysteme

EN 10 102 914 HOe 0619 I Version 5 I